# Prototype Design of a Teleoperation Robot for Endotracheal Intubation

Yuanfa Tao
Hefei University of Technology
taoyuanfa@sina.com

Tiewen Pan
The Second Military Medical University
pantw118@163.com

Qixin Cao
Shanghai Jiaotong University
qxcao@sjtu.edu.cn

## 1. Introduction

Endotracheal intubation is the first step of the first aid, The first aid can't be carried out if the endotracheal intubation haven't finish. Even endotracheal intubation always perform with high success rates in surgical department, but with lower success rates at emergency situation, where the rates can be as low as 70%at the first attempt and 89% at the second attempt.[1] The rescue time sometimes will lost if the first aid was not implemented timely.

In the process of rescue, endotracheal intubation is very important to save lives, the process requires professional medical skills, but some places the pre-hospital rescuers can't achieve in time such as skyscraper, aircraft carrier, nuclear pollution place, earthquake zones, etc. Teleoperation is a suitabe way to solve the problem. The endotracheal intubation robot for ambulance will become indispensable in the pre-hospital emergency situations. This robot provides an teleoperation way rather than mannual way to implement endotracheal intubation.

Thomas M. Hemmerling et al developed a Kepler Intubation System which can carry out endotracheal intubation by teleoperation.[2] But it consists of a menchanical arm, it is not potable. This paper focuses on the prototype design of a teleoperation robot for endotracheal intubation. We first, design a robot which can fulfil the intubation work. Second, establish the teleoperation system to check this robot's function like fexibility, stability and portability.

## 2. Methods

Traditional endotracheal intubation needs to be done manually by a doctor, like the Fig.1, a laryngoscope will be used to expose the glottis, then a tube will be insert to the tracheal manually. So the robot itself needs to have the function of the implementation of endotracheal intubation, including bending and feeding the tube, transmit the images, etc. Not like the common laparoscopic surgical instruments, there isn't another cavity for the endoscope. This robot need to provide enough room for the endoscope at the same time like the single port access robot[3].

1. Blending

Bending the tube is the main action of endotracheal intubation, because the tunnel from a man's mouth to the trachea is not straight, even the oral internal condition is pretty good and with the laryngoscope help, only a part of the glottis can be seen.

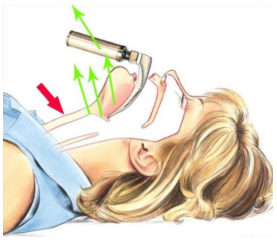

Fig.1. laryngoscope

Fig.2. Endotracheal intubation

A structure which was driven by four cables can fulfill the blending task. The four cables works cooperatively.As the Fig.3 shows when the line2 shinks, it's opposite one(invisible in this Fig) extends the same length, the tube will bend towards us, and when the line3 shinks, the line1 extends the tube will bend to right direction. The four cables can be divided into two groups which could bend the tube independently.

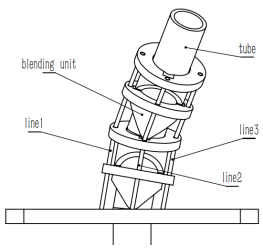


Fig.3. Blending structrue

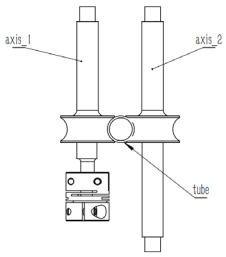


Fig.4. Feeding structrue

2. Feeding

When the robot was placed in the mouth, the end of the tube will touch the end of the tongue, but there are still some distance to reach the specific position namely 1-2cm ahead of bronchia.

As the Fig.4 shows,the distance between the two axes is adjustable,so the two rollers which somekind like a clutch can feed or retract the tube if the distance decreaced, and free it if the distance increased. The distance canbe adjusted by the rescuers nearby the patient.

3. Sending the images back

The aspirator was tried to be placed into the tunnel of the tube to suck the secretion out. After the aspirator's work has been done,it should be retract from this tunnel ,because it is the same place that the endoscope should located in.The endoscope can take photoes and then send them back to the doctor all the time, the doctor

need to decide how to adjust the robot according to these images by operateing the master manipulator.

4. Teleoperation system

Figure.5 illustrates the teleoperation system main stucture. The doctor should give instructions to the master manipulator, the master controller will detect the signals from the master manipulator and send these signals out. When the slave wireless receiving module received these signals, the slave controller will translate these signals to the demands that the slave manipulator can execute. The robot's motion will change the images the endoscope can obtain. Each image the endoscope got will transmit to the doctor as a guidance to opperate.

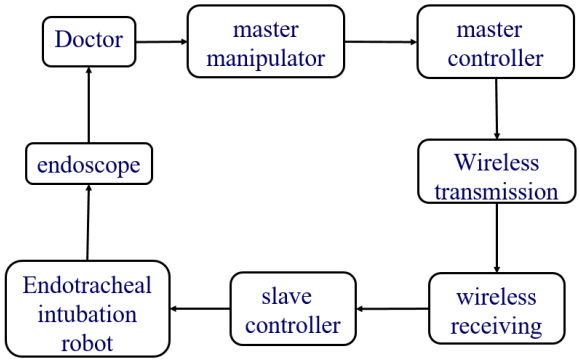


Fig.5. The teleoperation system diagram

## 3. Results and Discussions

To satisify these demands, a robot has been design. The bending motion was driven by four motors that each linked by a steel cable, and the feeding motion was driven by another motor which will rotate the rollers in Fig.4.

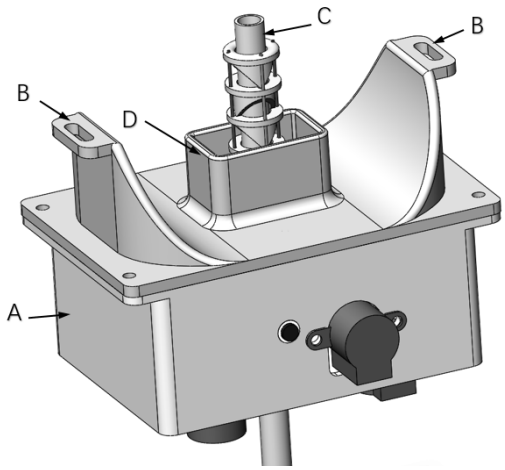


Fig.6. The whole robot. (A) Mechanical transmission parts box. (B) Slotted hole the belt tie to. (C) Endotracheal tube. (D) Rectangular block.

As the Fig.6 shows the transmission mechanism was hid in the gray box. The C and D part will be placed in the mouth when the device is in use. A belt will be employed to help wearing the device like a gauze mask. When a patient has worn the device, the D part will keep the upper and lower teeth a certain distance spontaneously. The whole device including the endoscope will be taken away and left the tube where it is when the intubation process has been done.

The necessary mechanical part has been made and assembled. The full slave robot has been established. After the teleoperation system was built, the slave robot can bend the the tube to any direction as the Fig.7 shows.

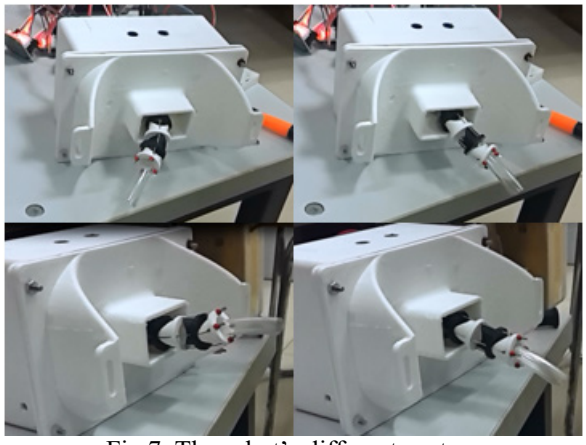

Fig.7. The robot's different gesture

## 4. Conclusions

A new robot has been proposed to accoplish the endotracheal intubation. The fundamental parts has been made, and the basic functions has been test. The animal vivo experiment will be carried out next step. A small structure that could elevate the tongue will be added later.After the experiment, the parameter of main mechanical parts will be optimized.

**Acknowledgement**

This work was supported by the National Natural Science Foundation of China under Grant 81371650 and the Technological Innovation Program of the Science and Technology Commission of Shanghai Municipality under Grant No.16441908500.

## References

[1] choi YF, Wong TV, Lau CC, *et al*. A study of orotracheal intubation in emergency departments in five district hospitals in Hong Kong. HKJEM 2003;10:138-45

[2] Thomas M. Hemmerling, MSc, MD, DEAA, Mohamad Wehbe, MASc, Cedrick Zaouter, MD, RiccardoTaddei, MD, and Joshua Morse. Technical Communication: The Kepler Intubation System. Anesth AnalgMarch 2012 ;114:590–4

[3] Yo Kobayashi et al. A surgical robot with vision field control for single port endoscopic surgery.Int J Med Robotics Comput Assist Surg 2010; 6: 454–464